EE2FH4
Electromagnetics I

Term II, January – April 2026

MATLAB Examples and Exercises (Set 8)

Prepared by: Dr. M. H. Bakr and C. He

Example: An electric field $\mathbf{E} = \dfrac{5\times10^4}{\rho}\mathbf{a}_\rho$ V/m exists in cylindrical coordinates. Find analytically the electric energy stored in the region bounded by $1.0\text{ m} < \rho < 2.0\text{ m}$, $-2.0\text{ m} < z < 2.0\text{ m}$ and $0 < \phi < 2\pi$, as shown in Figure 8.1. Verify your answer using a MATLAB program.

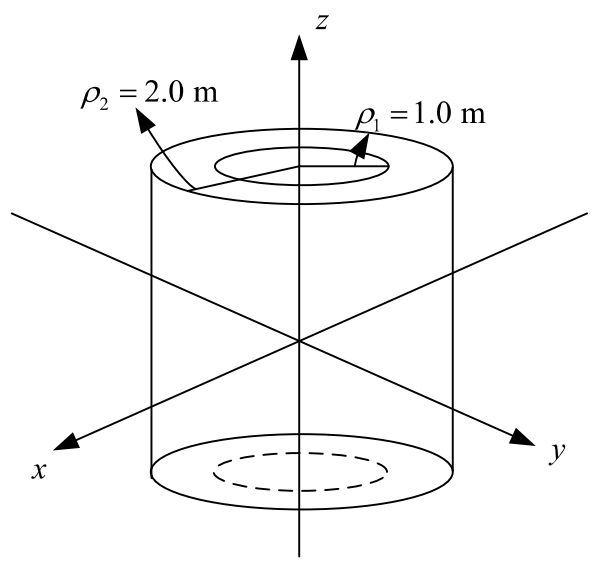

Figure 8.1 The region bounded by $1.0\text{ m} < \rho < 2.0\text{ m}$, $-2.0\text{ m} < z < 2.0\text{ m}$ and $0 < \phi < 2\pi$.

Analytical solution:
The energy stored in a region is given by

$$W_E = \frac{1}{2}\iiint_V \varepsilon_0 E^2 dv$$

where E is the magnitude of the electric field at the volume element dv which is given by

$$E = |\mathbf{E}| = \frac{5\times10^4}{\rho} \text{ V/m}$$

In cylindrical coordinate we have $dv = \rho d\rho d\phi dz$, therefore

$$W_E = \frac{1}{2}\iiint_V \varepsilon_0 E^2 dv$$

$$= \frac{1}{2}\int_{z=-2.0}^{z=2.0}\int_{\phi=0}^{\phi=2\pi}\int_{\rho=1.0}^{\rho=2.0} \varepsilon_0 \left(\frac{5\times10^4}{\rho}\right)^2 \rho d\rho d\phi dz$$

$$= \frac{2.5\times10^9\varepsilon_0}{2}\int_{z=-2.0}^{z=2.0}\int_{\phi=0}^{\phi=2\pi}\int_{\rho=1.0}^{\rho=2.0} \frac{1}{\rho} d\rho d\phi dz$$

$$= \frac{2.5\times10^9\varepsilon_0}{2}\int_{z=-2.0}^{z=2.0}\int_{\phi=0}^{\phi=2\pi} \ln(\rho)\Big|_{\rho=1.0}^{\rho=2.0} d\phi dz$$

$$= \frac{2.5\times10^9\varepsilon_0}{2}\times\ln(2)\int_{z=-2.0}^{z=2.0} \phi\Big|_0^{2\pi} dz$$

$$= \frac{2.5\times10^9\varepsilon_0}{2}\times\ln(2)\times 2\pi\, z\Big|_{z=-2.0}^{z=2.0}$$

$$= \frac{2.5\times10^9\times\frac{1}{36\pi}\times10^{-9}}{2}\times\ln(2)\times2\pi\times4 = 0.19254 \text{ J}$$

MATLAB Solution:
To write a MATLAB program to evaluate the energy stored in the given region, we can divide the region into many small volume elements and evaluate the energy in each of these elements. Finally, the summation of these energies will be close to the total energy stored in the given region. The approach can be summarized using the mathematical expression:

$$W_E = \sum_{k=1}^{p}\sum_{j=1}^{m}\sum_{i=1}^{n} \Delta W_{Ek,j,i}$$

$$= \sum_{k=1}^{p}\sum_{j=1}^{m}\sum_{i=1}^{n} \frac{1}{2}\varepsilon_0 |\mathbf{E}_{k,j,i}|^2 \Delta v_{k,j,i}$$

$$= \sum_{k=1}^{p}\sum_{j=1}^{m}\sum_{i=1}^{n} \frac{1}{2}\varepsilon_0 \left(\frac{5\times10^4}{\rho_{k,j,i}}\right)^2 \rho_{k,j,i}\Delta\rho\Delta\phi\Delta z$$

MATLAB code:

```
clc; %clear the command line
clear; %remove all previous variables

Epsilono=1e-9/(36*pi); %use permitivity of free space
rho_upper=2.0;%upper bound of rho
rho_lower=1.0;%lower bound of rho
phi_upper=2*pi;%upper bound of phi
phi_lower=0;%lower bound of phi
z_upper=2;%upper bound of z
z_lower=-2;%lower bound of z
Number_of_rho_Steps=50; %initialize discretization in the rho direction
drho=(rho_upper-rho_lower)/Number_of_rho_Steps; %The rho increment
Number_of_z_Steps=50; %initialize the discretization in the z direction
dz=(z_upper-z_lower)/Number_of_z_Steps; %The z increment
Number_of_phi_Steps=50; %initialize the phi discretization
dphi=(phi_upper-phi_lower)/Number_of_phi_Steps; %The step in the phi direction

WE=0;%the total engery stored in the region
for k=1:Number_of_phi_Steps
    for j=1:Number_of_z_Steps
        for i=1:Number_of_rho_Steps
           rho=rho_lower+0.5*drho+(i-1)*drho; %radius of current volume element
           z=z_lower+0.5*dz+(j-1)*dz; %z of current volume element
           phi=phi_lower+0.5*dphi+(k-1)*dphi; %phi of current volume element
           EMag=5e4/rho;%magnitude of electric field of current volume element
           dV=rho*drho*dphi*dz;%volume of current element
           dWE=0.5*Epsilono*EMag*EMag*dV;%energy stored in current element
           WE=WE+dWE;%get contribution to the total energy
       end %end of the i loop
   end %end of the j loop
end %end of the k loop
```

Running result:

```
>> WE

WE =

   0.1925
>>
```

Comparing the two answers, we see that our MATLAB solution and analytical solution are consistent.

Exercise: Given the surface charge density $\rho_s = 2.0\ \mu\text{C/m}^2$ existing in the region $r = 1.0$ m, $0 < \phi < 2\pi$, $0 < \theta < \pi$ and is zero elsewhere (See Figure 8.2) . Find analytically the energy stored in the region bounded by $2.0\text{ m} < r < 3.0$ m, $0 < \phi < 2\pi$ and $0 < \theta < \pi$. Write a MATLAB program to verify your answer.

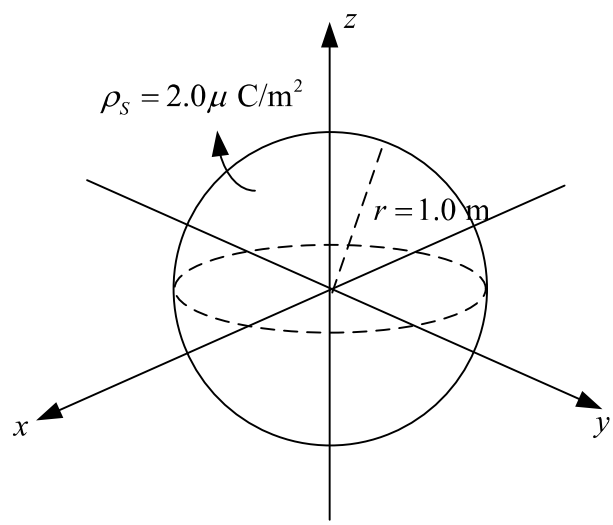

Figure 8.2 The surface charge density $\rho_s = 2.0\ \mu$ C/m^2 at $r = 1.0$ m.